CRAFTY RR, SILVER/BLACK/RED, 2021

obj. č: 010.21255

Sugerowana cena

36.399 zł

Specyfikacje techniczne

produkowane rozmiary
S 380mm / M 420mm / L 450mm / XL 490mm

waga
24,6 Kg

rama
Crafty 6061 Alloy Stealth Evo, e-Bike Optimized Zero Suspension System, 150mm travel, Forward Geometry, internal removable battery with integrated alloy cover, Boost 12x148mm rear axle, tapered head tube, one-piece Monoblock upper link, HHG internal cable routing, MAX capacity sealed bearings, oversize 17mm axles, integrated dropout speed sensor, exclusive plastic motor covers.

widelec
Fox 38 29 Float FIT4 EVOL Factory Kashima, 160mm, e-bike tuned, tapered steerer tube, Boost 15x110mm axle, offset 44mm. Settings: 3 positions with micro adjust compression, low-speed rebound, air preload

stery
Onoff Saturn tapered for 1-1/8 to 1-1/2 head tube, ACB sealed bearings, top 41x30.2x7x45x45, bottom 51.9x40x8x45x45

przerzutka
Sram GX Eagle, Type 3 roller bearing clutch, cage lock, 1x12s, X-Actuation 1:1

manetki
Sram Trigger GX Eagle, 12s, X-Actuation 1:1, single click

klamki hamulca
Sram Code R, tool-free reach adjust

uchwyty
Race Face Aeffect ebike, 165mm

kierownica
Onoff Sulfur 1.0 double butted 6061 alloy, rise: 20mm, width: 780mm, 9 backsweep, 5upsweep, 31.8mm barbore Onoff Desert, 1lock-on, 135mm, sizes: S/M L/XL

mostek
Onoff Sulfur FG 30mm 0, 6061 forged alloy, 31.8mm barbore

sztyca
Onoff Pija dropper internal, diameter 31.6mm, S size: 387x125mm, M size: 425x150mm, L/XL size: 465x170mm

siodełko
SDG BEL-AIR 3.0, EVA foam, alloy rails

piasta przednia
DT 370, Boost 15x110mm, IS 6 bolts

tylna piasta
DT 370, Boost 12x148mm, 3 Pawl system, IS 6 bolts

łańcuch
Sram NX Eagle, 12s, Powerlock

kaseta
Sram XG-1230, 11-50T, 12s

szprychy
DT Hybrid SP, straightpull

rafki
DT Swiss H1900 Spline 29, 30mm internal width, sleeved aluminum, tubeless ready, 28 spokes

obudowa
Maxxis Minion DHF 29x2.6, tubeless ready, 3C MAXX TERRA, EXO+ Protection, 120TPI, folding bead

zamówienie numer
010.21255

amortyzator
Fox Float DPX2 LV EVOL Factory Kashima, 205x65mm. Settings: compression 3 positions lever, low-speed compression, low-speed rebound, air preload. Trunnion top mount, 25x10mm bottom bushings

przedni hamulec
Sram Code R, oversized 4-piston caliper, Centerline 200mm IS 6 bolts one-piece rotor, steel-backed metal sintered pads

tylny hamulec
Sram Code R, oversized 4-piston caliper, Centerline 200mm IS 6 bolts one-piece rotor, steel-backed metal sintered pads

owijka
Maxxis Minion DHR II 29x2.6, tubeless ready, 3C MAXX TERRA, EXO+ Protection, 120TPI, folding bead

regulacja amortyzatora
CEC001 compression, Medium rebound, 0.2 volume spacer

korba
Sram X-Sync 2 Eagle 34T, steel, narrow-wide, 104 BCD

mocowanie przerzutki
Mondraker M068

silnik + akumulator
Bosch Performance Line CX Cruise (25Km/h) GEN4, computer Bosch Kiox, Bosch Powertube 625Wh

Geometria

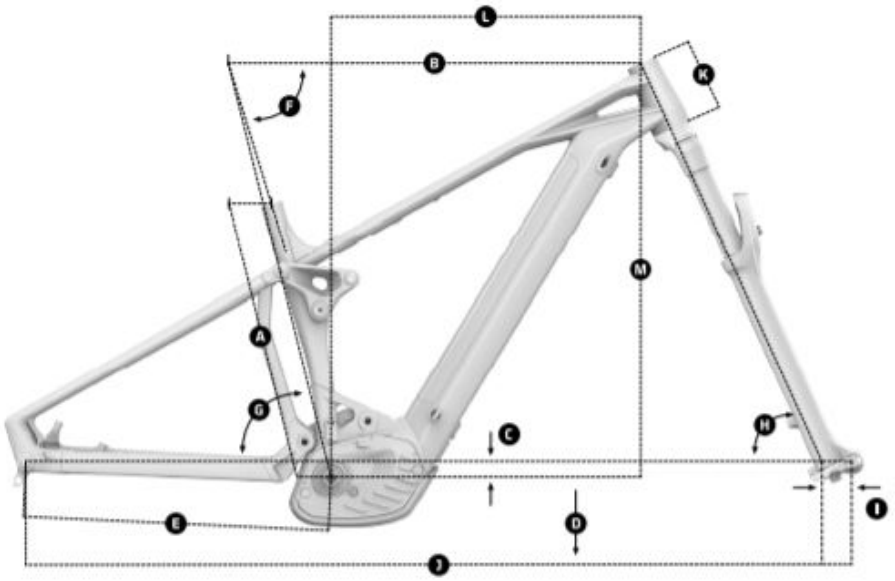

GEOMETRY

Size	S	M	L	XL
A Seat Tube Length	380 mm	420 mm	450 mm	490 mm
B Top Tube Length	605 mm	625 mm	650 mm	670 mm
C Bottom Bracket Drop	-25 mm	-25 mm	-25 mm	-25 mm
D Bottom Bracket Height	350 mm	350 mm	350 mm	350 mm
E Chainstay Legth	455 mm	455 mm	455 mm	455 mm
F Seat Tube Angle, Actual	73.5°	73.5°	73.5°	73.5°
G Seat Tube Angle, Effective	76°	76°	76°	76°
H Head Tube Angle	65.5°	65.5°	65.5°	65.5°
I Fork Offset	44 mm	44 mm	44 mm	44 mm
J Wheelbase	1225 mm	1245 mm	1265 mm	1285 mm
K Head Tube Length	110 mm	110 mm	130 mm	130 mm
L Reach	450 mm	470 mm	490 mm	510 mm
M Stack	622 mm	622 mm	640 mm	640 mm